FIG.6 STARTER CLUTCH

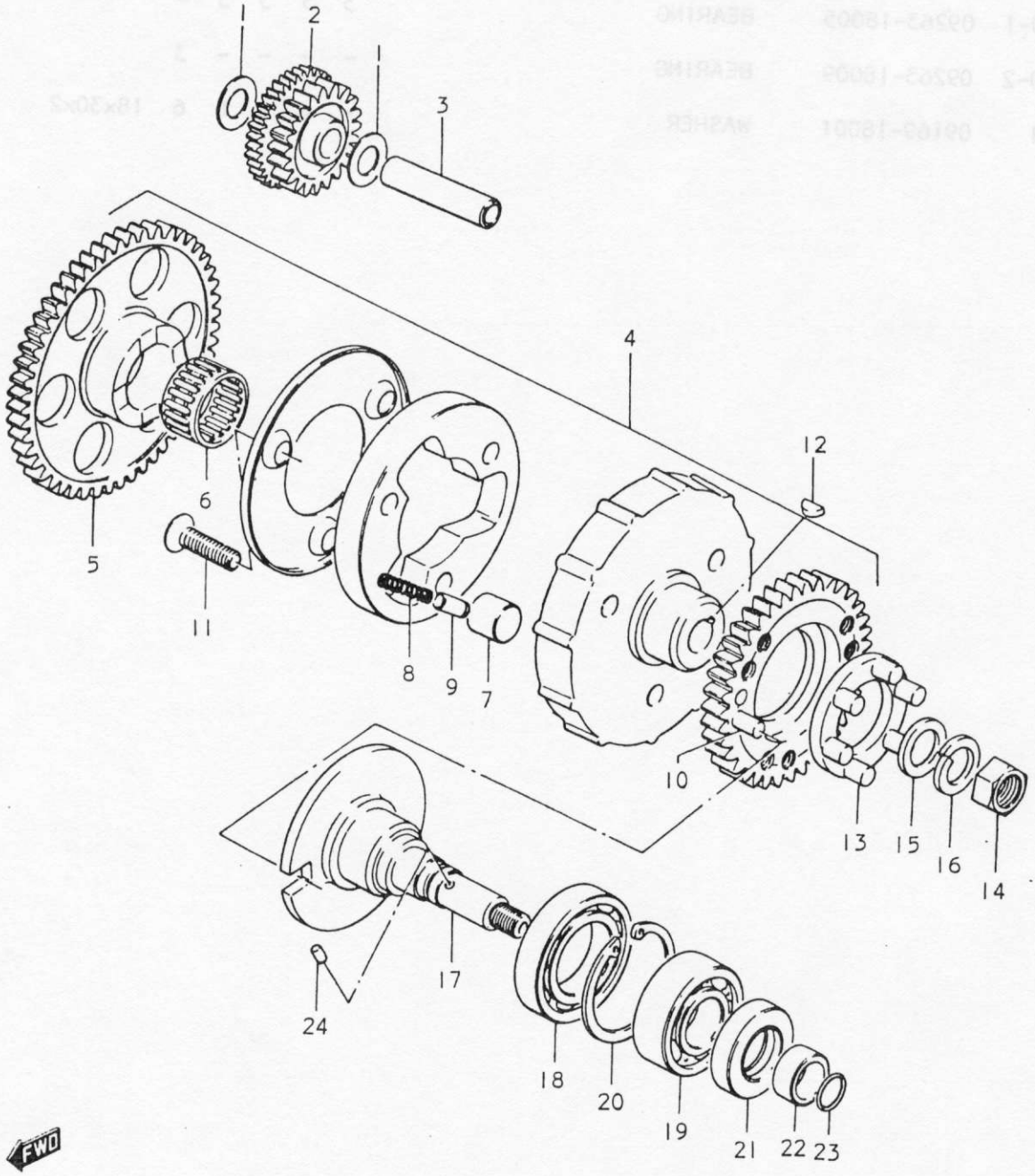

FIG.6 STARTER CLUTCH

Ref.No.	Part No.	Description	Q'ty K	L	M	A	B	Remarks
1	09160-13003	WASHER	2	2	2	2	2	13.3x25x0.85
2	12611-31000	GEAR, starter idle	1	1	1	1	1	NT:43/22
3	09206-13003	PIN	1	1	1	1	1	
4-1	12603-31816	STARTER CLUTCH SET	1	1	-	-	-	to 12600-31831
4-2	12600-31832	STARTER CLUTCH SET	-	-	1	1	1	from 12600-31831
5	12620-31003	·GEAR	1	1	1	1	1	NT:55
6	09263-25011	·BEARING	2	2	2	2	2	
7	09261-15001	·ROLLER	3	3	3	3	3	
8	09440-04015	·SPRING	3	3	3	3	3	
9	12633-31000	·PIECE, roller push	3	3	3	3	3	
10-1	09261-07003	·PIN	1	1	1	1	1	for Water Pump Drive Gear* painted Blue
10-2	06211-07202	·PIN	1	1	1	1	1	for Water Pump Drive Gear* painted Red
11	02121-08308	·SCREW	3	3	3	3	3	
12	08341-31039	KEY	1	1	1	1	1	
13	12582-31040	RUBBER, breaker cam shaft	1	1	1	1	1	from 12719-31040
14	08312-11128	NUT	1	1	1	1	1	
15	08322-11128	WASHER	1	1	1	1	1	
16	08321-21128	LOCK WASHER	1	1	1	1	1	
17	12555-31000	SHAFT, breaker cam	1	1	1	1	1	from 12711-31000
18	09262-30020	BEARING	1	1	1	1	1	
19	08110-63020	BEARING	1	1	1	1	1	
20	08331-21429	CIRCLIP	1	1	1	1	1	
21	09283-20024	OIL SEAL	1	1	1	1	1	
22	09180-14006	SPACER	1	1	1	1	1	14x20x9
23	09280-12003	O RING	1	1	1	1	1	
24	06211-03052	DOWEL PIN	1	1	1	1	1	

*Water Pump Drive Gear is the inner parts of Starter Clutch Set.
So, it is not available as spare parts.

B13

FIG.6 STARTER CLUTCH

Ref.No.	Part No.	Description	Q'ty K	L	M	A	B	Remarks
1	09160-13003	WASHER	2	2	2	2	2	13.3x25x0.85
2	12611-31000	GEAR, starter idle	1	1	1	1	1	NT:43/22
3	09206-13003	PIN	1	1	1	1	1	
4-1	12603-31816	STARTER CLUTCH SET	1	1	-	-	-	to 12600-31831
4-2	12600-31832	STARTER CLUTCH SET	-	-	1	1	1	from 12600-31831
5	12620-31003	·GEAR	1	1	1	1	1	NT:55
6	09263-25011	·BEARING	2	2	2	2	2	
7	09261-15001	·ROLLER	3	3	3	3	3	
8	09440-04015	·SPRING	3	3	3	3	3	
9	12633-31000	·PIECE, roller push	3	3	3	3	3	
10-1	09261-07003	·PIN	1	1	1	1	1	for Water Pump Drive Gear* painted Blue
10-2	06211-07202	·PIN	1	1	1	1	1	for Water Pump Drive Gear* painted Red
11	02121-08308	·SCREW	3	3	3	3	3	
12	08341-31039	KEY	1	1	1	1	1	
13	12582-31040	RUBBER, breaker cam shaft	1	1	1	1	1	from 12719-31040
14	08312-11128	NUT	1	1	1	1	1	
15	08322-11128	WASHER	1	1	1	1	1	
16	08321-21128	LOCK WASHER	1	1	1	1	1	
17	12555-31000	SHAFT, breaker cam	1	1	1	1	1	from 12711-31000
18	09262-30020	BEARING	1	1	1	1	1	
19	08110-63020	BEARING	1	1	1	1	1	
20	08331-21429	CIRCLIP	1	1	1	1	1	
21	09283-20024	OIL SEAL	1	1	1	1	1	
22	09180-14006	SPACER	1	1	1	1	1	14x20x9
23	09280-12003	O RING	1	1	1	1	1	
24	06211-03052	DOWEL PIN	1	1	1	1	1	

*Water Pump Drive Gear is the inner parts of Starter Clutch Set. So, it is not available as spare parts.

B13